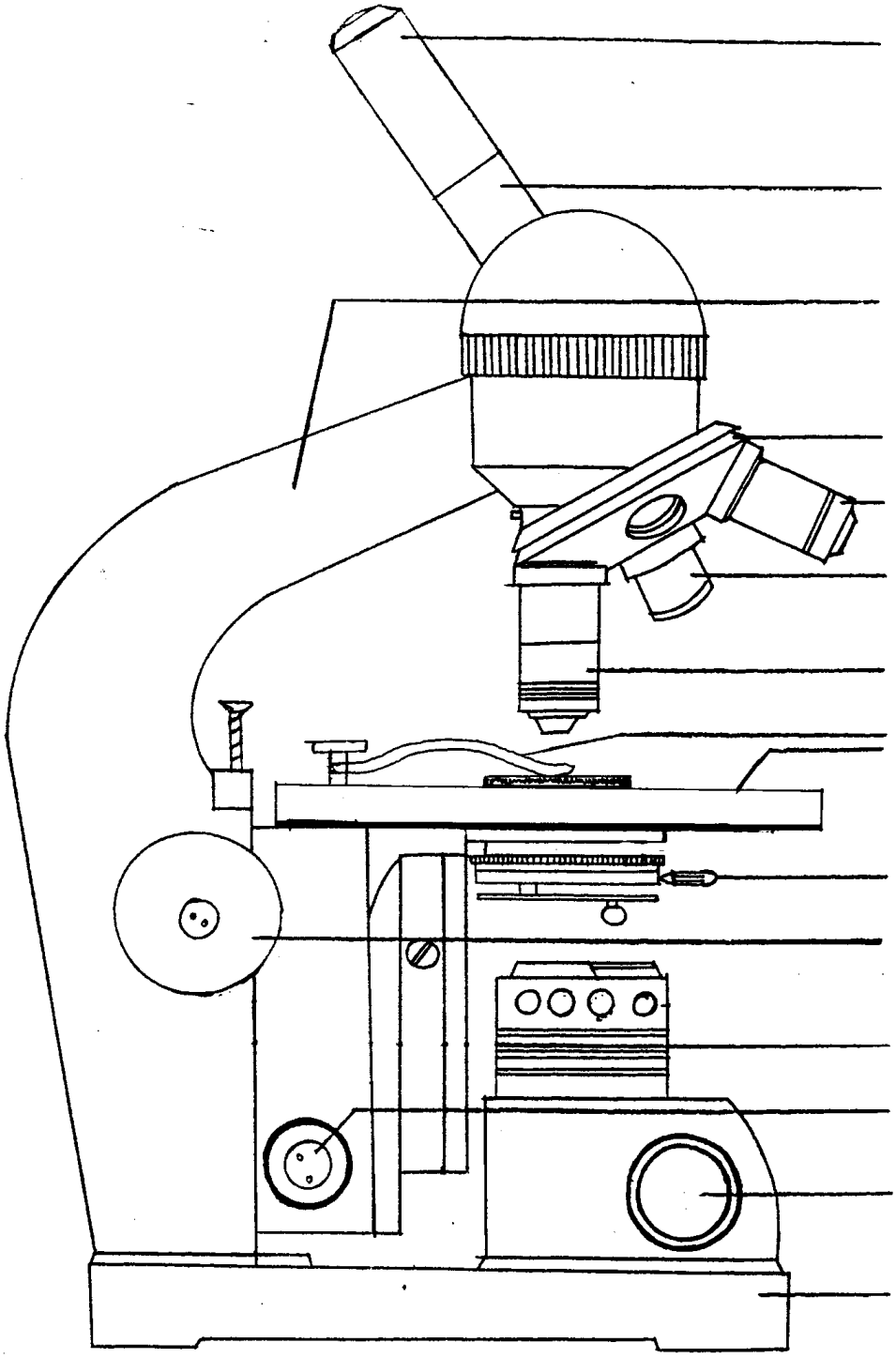Microscope Diagram and Parts